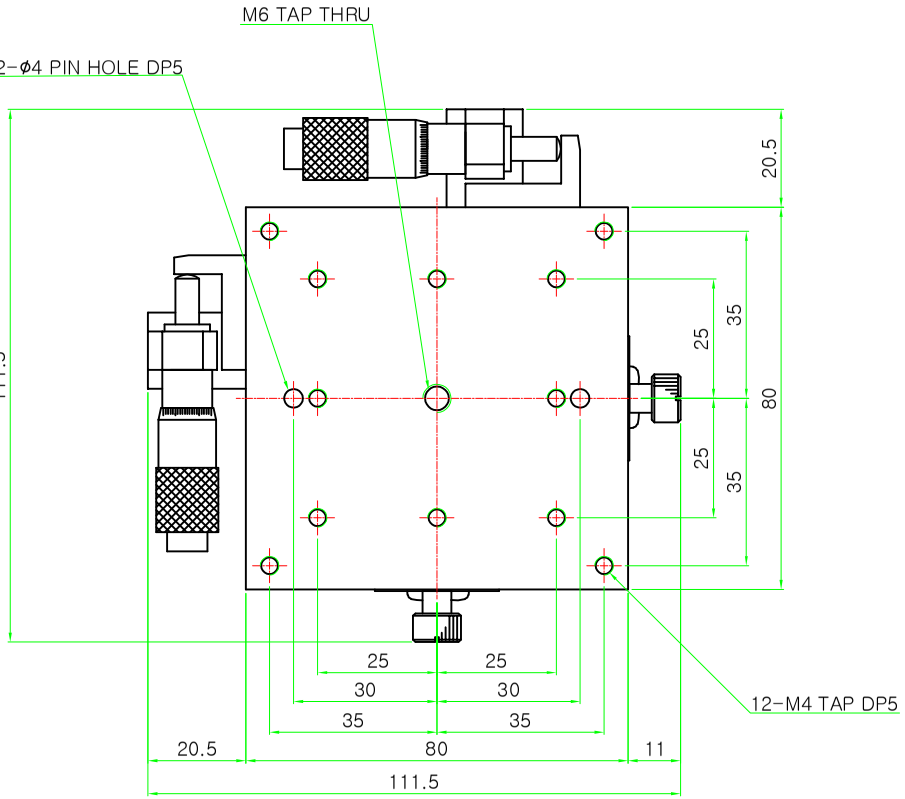

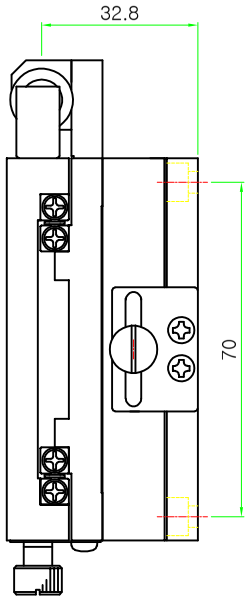

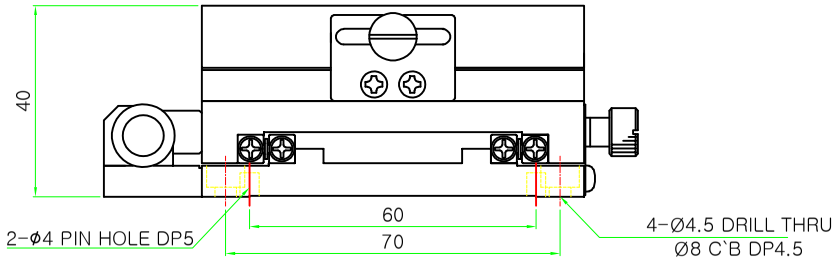

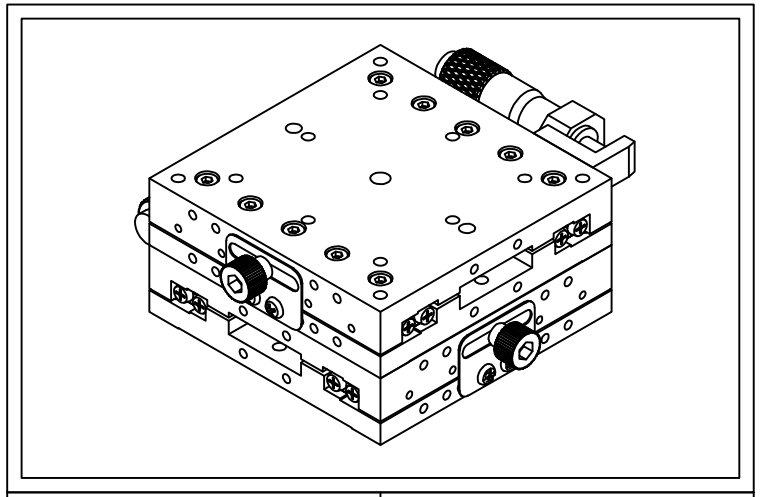

Model	JCXY-80L-13
Surface Size	80x80mm
Position of Micrometer Head	Left
Travel Range	±6.5mm
Minimum Reading of Micrometer	10um
Guide Type	Crossed Roller Guide
Load Capacity	9.5Kgf
Parallelism	60um
Driving Parallelism	20um
Weight	0.80Kg
Material	Aluminum
Finish Treatment	Black Anodizing

JCXY - 80L - 13

东莞市诚鲲五金电子科技有限公司